STOVE MANUAL

www.directstoves.com

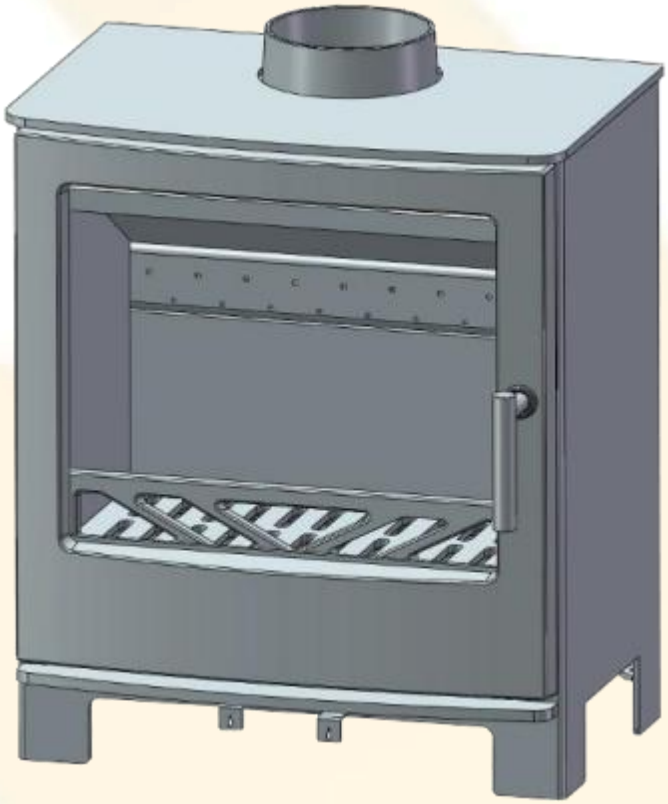

Bolesworth

Version 1 2025.6.3

Section	Contents	Page

1.	The clean air act 1993 and smoke control areas	3
2.	Product specification	4
3.	Important information about installing and using the stove	5
4.	Unpacking & Assembly	7
5.	Installation of the stove	9
6.	Operating Instructions	12
7.	Guidance on safe operation	19
8.	Maintenance	21
9.	Fault Finding	25
10.	UKCA Data Plate	26

1-The clean air act 1993 and smoke control areas

Under the Clean Air Act 1993, local authorities have the power to designate all or part of their district as a smoke control area.

Within a smoke control area, it is an offense to emit smoke from a building's chimney, a furnace, or any fixed boiler. It is also an offense to purchase an 'unauthorised fuel' for use in a smoke control area, unless it is burned in an 'exempt' appliance. ('Exempted' from the rules that typically apply in these zones).

The process for approving exempt appliances varies across the UK:

In England, appliances are exempted through a list published by the Secretary of State, in accordance with the Clean Air Act 1993 (as amended by the Deregulation Act 2015).

In Scotland, Scottish Ministers publish a list of exempt appliances under the Regulatory Reform (Scotland) Act 2014.

In Wales and Northern Ireland, exemptions are granted through regulations made by Welsh Ministers and the Department of the Environment, respectively.

Your local authority is responsible for implementing and supervising smoke control areas under the Clean Air Act 1993. For specific details on local requirements, you should contact them directly. Further information on these regulations can be found at: https://www.gov.uk/smoke-control-area-rules.

The Bolesworth (S106M) stove has been approved as suitable for use in smoke control areas when burning wood logs

THANKS FOR BUYING OUR STOVE, PLEASE READ THESE INSTRUCTIONS CAREFULLY

For your safety it is very important that your stove is correctly installed. Take care when assembling and moving the stove. It is made of cast iron and is very heavy (80 kgs)

This steel body with cast iron door stove Bolesworth have been recommended as suitable use in smoke control areas when burning wood and Maxibrite.

A CO monitor is required to be installed in the same room as the appliance.

2. Product specification

Item No.		**Bolesworth**
Weight		**80KGS**
Dimensions (WXDXH)mm		**W490 X310 (max footprint/exc handle) X550(exc flue)**
Flue size		**125mm**
Wood Logs Results, 0.83 hour refuels		
Parameter		**Mean**
Test duration	**h**	**0.82**
Total efficiency	**%**	**81.3**
Nominal heat output	**kW**	**5.0**
Mean CO^2 emission	**%**	**10.7**
Mean CO emission	**%**	**0.15**
Mean CO emission (at 13 % O_2)	**%**	**0.11**
Mean flue gas temperature	**ºC**	**274**
Flue gas mass flow	**g/s**	**3.8**
Mean C_nH_m emission (at 13 % O_2)	**Nmg/m³**	**90**
Mean NOx emission (at 13 % O_2)	**Nmg/m³**	**97**
DIN Plus particulates (at 13 % O_2)	**Nmg/m³**	**10**

Maxibrite Results, 1.0 hour refuels		
Parameter		**Mean**
Test duration	**h**	**1.0**
Total efficiency	**%**	***77.0***
Nominal heat output	**kW**	***5.0***
Mean CO^2 emission	**%**	**9.4**
Mean CO emission	**%**	**0.14**
Mean CO emission (at 13 % O_2)	**%**	**0.11**
Mean flue gas temperature	**ºC**	**280**
Flue gas mass flow	**g/s**	***4.4***
Mean C_nH_m emission (at 13 % O_2)	**Nmg/m³**	**17**
Mean NOx emission (at 13 % O_2)	**Nmg/m³**	**107**
DIN Plus particulates (at 13 % O_2)	**Nmg/m³**	**18**

Please note that details and specifications contained herein are correct at the time of going to print. We reserve the right to change specifications at any time without prior notice.

3. Important information about installing and using the stove

Installation and Regulations

When installing the stove, you must comply with all national and local regulations, including any applicable national and European standards. The installation must be carried out by a registered installer or receive approval from your local building control officer. The stove must not be connected to a chimney that serves any other appliance.

Proper Use and Fuel

This stove is designed for domestic heating purposes only. You should only burn approved fuels, such as wood or manufactured smokeless fuel. Do not use petroleum-based products or use the stove as an incinerator. This appliance is suitable for intermittent burning.

Safety and Operations

The stove will become extremely hot during operation, so please exercise due care. Always use thick, protective gloves when adjusting the controls, adding fuel, or removing ash. Keep all flammable objects a safe distance away from the stove.

It is possible to fire the stove beyond its design capacity, which can cause damage. Watch for signs of overfiring; if any part of the stove begins to glow red, you must adjust the air controls immediately. Never leave the stove unattended for long periods without first adjusting the controls to a safe setting. Careful control of the air supply must be exercised at all times.

Maintenance and Modifications

Do not make any unauthorised changes or modifications to the stove. The stove and chimney flue must be cleaned regularly. It is especially important to check for blockages after a prolonged period of not being used. It is highly recommended that a competent engineer regularly maintains the stove and flue.

All national and local regulations, including those referring to national and European standards, need to be complied with when installing the stove.

The stove must be installed by a registered installer or approved by your local building control officer.

Only use for domestic heating purposes only.

Burn only approved fuels (Wood or manufactured smokeless fuel). Do not use petroleum-based products or use as an incinerator.

This stove will become very hot whilst in operation and due care should be taken. Thick gloves should be used to operate the primary/secondary controls or reaching inside the stove to position fuel or remove ash. Do not place flammable objects on or near the stove.

It is possible to fire the stove beyond its design capacity. This could damage the stove, so watch for signs of overfiring - if any part of the stove starts to glow red, the stove is in an overfire situation, and the controls should be adjusted accordingly. Never leave the stove unattended for long periods without first adjusting the controls to a safe setting. Careful air supply control should be exercised at all times.

The stove must NOT be installed into a chimney that serves any other appliance and is suitable for intermittent burning.

Do not make unauthorised changes or modifications to the stove

The stove and chimney flue must be regularly cleaned. It is especially important to check for blockages following a prolonged shutdown period. It is recommended that the stove and flue is regularly maintained by a competent engineer.

4. Unpacking & Assembly

Warning: Due to the weight of the stove it is recommended that two people perform the unpacking and assembly

Unpacking

Before assembling, please check contents against the following list and advise your dealer immediately if any parts are missing.

- 1 x Stove body
- 1 x Flue Connector c/w Fireproof Gasket
- 1 x Firebox Top Baffle Plate A
- 1 x Firebox Top Baffle Plate B
- 1 x Flue Blanking Plate
- 1 x Ash pan & Handle
- 1 x Grate
- 1 x Fixings Kit
- 1 x Heat Resistant Glove
- 1 x Vermiculite plate set

Assembly

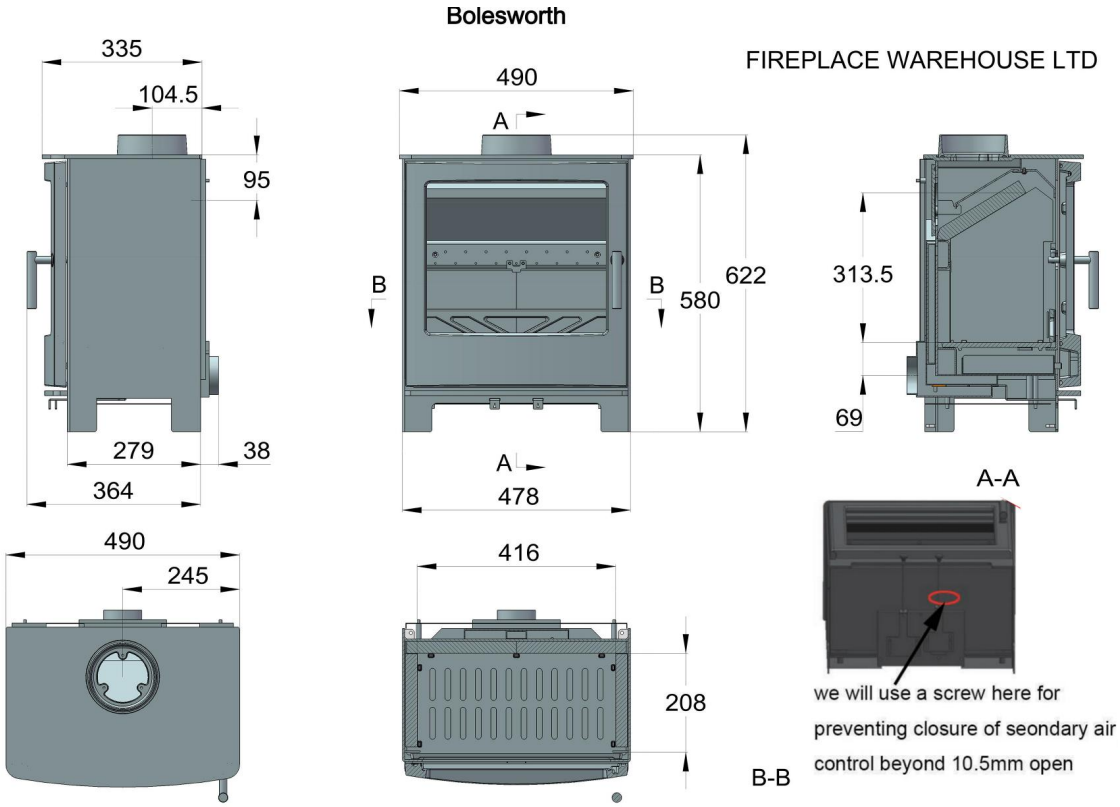

The Bolesworth (S106M) must be fitted with a permanent stop preventing closure of the secondary air control/air wash control beyond 10.5mm open and tertiary air controls beyond 12.5mm open.

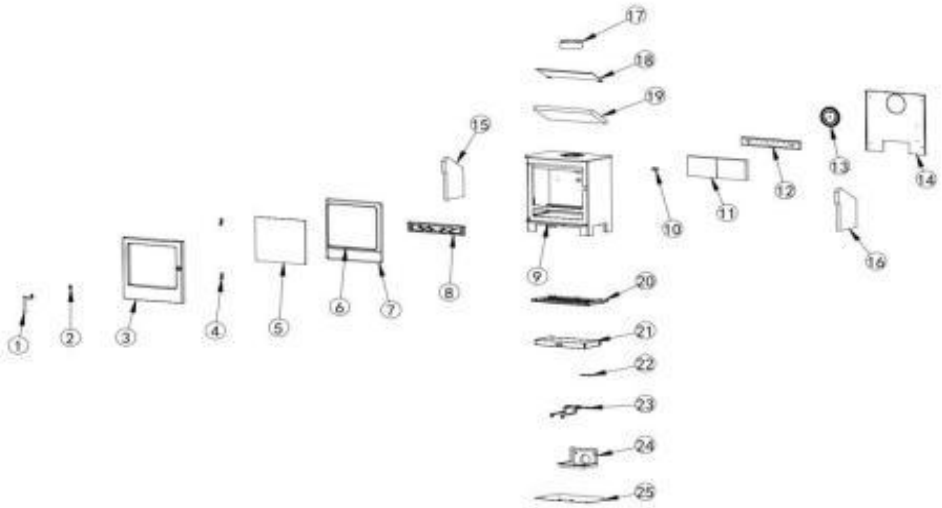

No.	Part Name	Qty	No.	Part Name	Qty
1	Black Handle	1	14	Rear heat shield	1
2	Handle Stop	1	15	Left Vermiculite plate	1
3	Cast iron Door	1	16	Right Vermiculite plate	1
4	Hinge	2	17	Spigot	1
5	Glass for Door	1	18	Steel Baffle B	1
6	Door glass rope 6mm	1	19	Vermiculite Baffle A	1
7	Door rope 10mm	1	20	Cast iron Grate	1
8	Cast iron Banking Bar	1	21	Ash pan	1
9	Steel Body	1	22	Defra Stop	1
10	Rear Vermuculate plate stop	1	23	Air control poles	2
11	Rear Vermuculate plate	2	24	Outer air box	1
12	Secondary Air box	1	25	Bottom heat shield	1
13	Blanking plate	1			

Unpack the stove and remove packing materials. Open the door and remove ashpan, flue adaptor and fixing fit from inside the stove

1. Sit the stove upright and attach the flue adaptor as showed picture below, using the screws supplied. Ensure the fireproof gasket is correctly seated in the base of the flue adaptor.

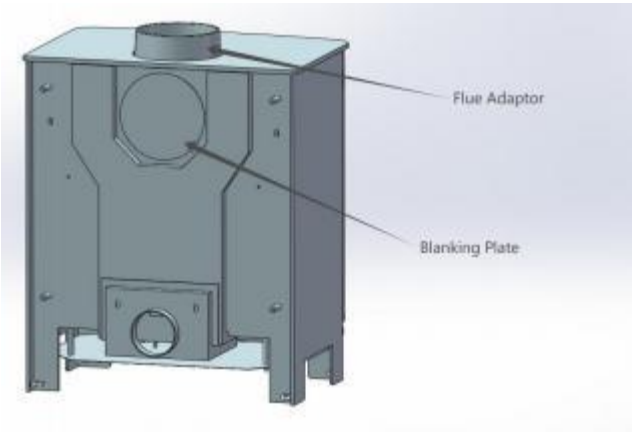

2. Install the blanking plate in the rear of the stove when the normal flue exit is required.

   If the rear mounting flue configuration is to be used, the blanking plate will be fitted to the top of the stove and the flue connector to the rear panel.

3. Set ashpan in position as shown as picture below. An ashpan handle is supplied for when the stove is in use.

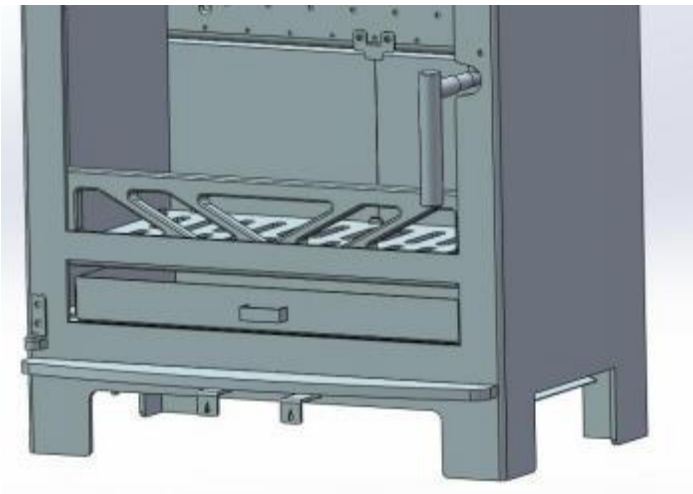

5. Installation of the stove

PLEASE READ THESE INSTRUCTIONS CAREFULLY

For your safety it is very important that your stove is correctly installed. Our Stoves cannot accept any responsibility for any fault arising through incorrect installation or use.

Material Clearances

The stove must have a minimum clearance to combustibles, which is shown below.

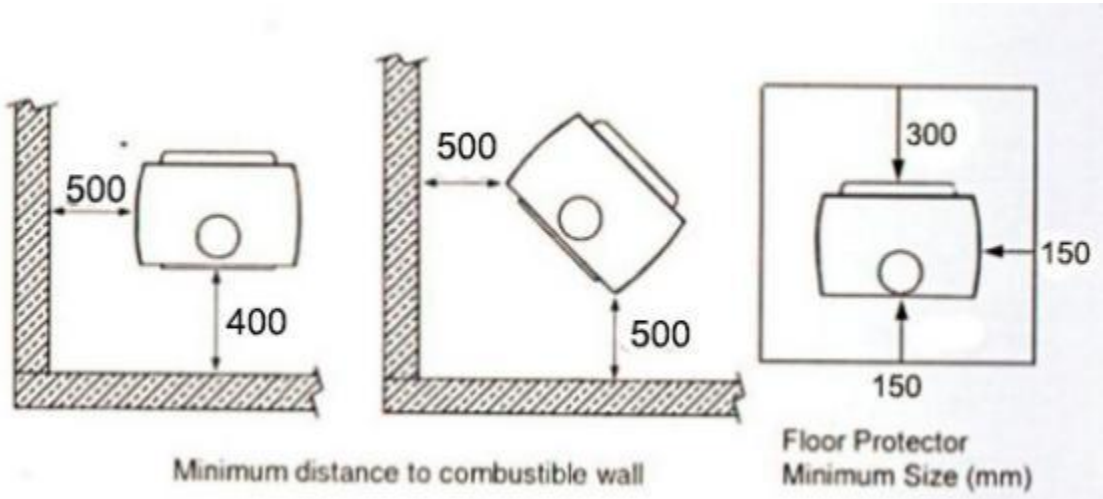

It is recommended to install the stove at least 500mm away from any combustible materials. Household furnishings, such as curtains or furniture, should be kept a minimum distance of 1000mm away, as they can be adversely affected by the heat.

Non-Combustible Recess:

If you are installing the stove within a non-combustible recess or alcove, you must leave at least 150mm of clearance at the back and sides. This gap is essential to allow for proper air circulation around the stove and to provide access for maintenance.

Safety Precautions

Due to the intense heat produced by the stove, a suitable fireguard should always be used to provide additional protection. Never leave young children or pets unsupervised in a room that contains a hot stove.

Floor and Hearth Requirements

The floor or hearth where the stove is to be installed must comply with all national and local building regulations. The floor must be capable of supporting the entire weight of the stove. During official testing, the maximum temperature recorded on the hearth was 78。C when the stove was operating at full capacity.

The Chimney and Flue

The stove is supplied with a flue pipe connector and fixing screws for either a top or rear-mounted installation.

Key requirements for the flue system:

- The stove must **never** be connected to a shared chimney or flue system.
- Never use a flue pipe with a cross-sectional area smaller than the stove' s outlet.
- The flue pipe must not project into the chimney connector in a way that would

restrict the flow of gases.

. You must ensure there is adequate access to the entire flue system to allow for thorough cleaning and maintenance.

Fume Emissions

To prevent chimney problems, such as the buildup of tar or creosote, you should not burn the fire on a low or slow setting for more than 12 hours without an intermitted period of fast, hot burning.

When properly installed and operated, this stove will not emit fumes into the room. Occasional, minor fumes during de-ashing and refueling may occur, but persistent fume emission is a sign of a problem and must not be tolerated.

If fume emission persists, take the following immediate actions:

1. Open all doors and windows to ventilate the room.
2. Let the fire go out. If necessary, safely remove the fuel from the stove and dispose of it.
3. Check the flue and chimney for blockages and clean them if required.
4. **Do not** attempt to relight the fire until the cause of the emission has been identified and corrected.

If necessary, seek professional advice from a qualified engineer.

It is recommended that the stove be installed at least 500 mm from combustible materials. However, any household furnishings should be at least 1000mm away as they could be adversely affected by heat.

If the stove is to be installed in a non-combustible recess it is recommended that 150mm clearance is left at the back and sides for maintenance and to allow air to circulate around the stove

Due to the heat of a hot stove, a suitable fire guard should be used to provide additional protection. Never allow young children to be left unsupervised in a room containing a hot stove.

Floor

National and local building regulations must be complied with when considering the floor or hearth where the stove is to be installed. The floor must be capable of bearing the weight of the stove and the maximum hearth temperature measured on testing was 78 deg C on full fire.

The Chimney

The stove is supplied with a flue pipe connector for top or rear mounting with the fixing screws supplied. The stove should never be connected to a shared chimney/flue system.

Flue pipes with a smaller cross-sectional area than that of the stove outlet should never be used. Flue pipes must not project into the chimney connector, such as to cause a restriction to the gas flow.

Consideration must be given to installing extra access in the flue system to ensure all sections can be cleaned and maintained.

Fume Emissions

To avoid chimney problems, your fire should not be burnt slowly for longer than 12 hours without a period of fast burning.

Properly installed and operated, this stove will not emit fumes. Occasional fumes from de-ashing and refueling may occur. Persistent fume emission must not be tolerated. If fume emission persists, the following immediate action should be taken:

1. Open doors and windows to ventilate room.
2. Let the fire go out, or eject and safely dispose of fuel from the stove.
3. Check for flue chimney blockage and clean if required.
4. Do not attempt to re-light the fire until the cause has been identified and corrected.

If necessary, seek professional advice.

6. Operating Instructions

The controls

The amount of heat produced by the stove is regulated using the air controls located at the front of the appliance. The stove has two distinct air supplies:

Primary Air: This control regulates the air coming from beneath the fuel. It is primarily used when burning mineral fuel (such as smokeless coal). Please note that when burning mineral fuel, you will need to de-ash the stove more frequently.
Secondary Air (Air-Wash): This control provides air from above the fuel, which is essential for the clean and efficient combustion of wood. This system also functions

as an ‘air-wash’, directing a flow of air down the inside of the door glass. When used correctly, this feature effectively keeps the glass clear of soot and other deposits.

By carefully adjusting these air vents, you can established precise control over the rate of combustion and the amount of heat the stove emits.

The amount of heat emitted by the stove is regulated using the air control built at front of the stove.

using primary air when burning mineral fuel and secondary air when burning wood. The need for de-ashing the appliance more frequently when burning mineral fuel.

By adjusting the degree to which the primary air and air-wash vents are opened, good control of the combustion is being established.

The “air-wash” feature when used, should function to effectively keep the inside of the door glass clear of smokey deposits.

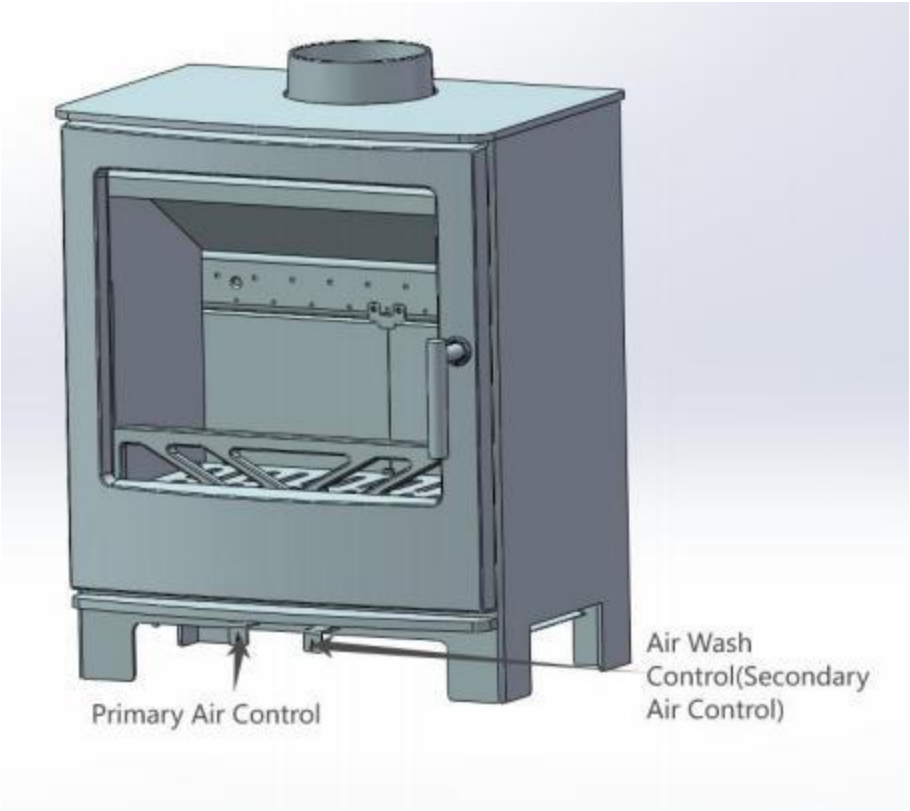

WARNING:

The temperature reached by these items during operation may cause an injury to an end-user. As these are intended to be adjusted during operation, it is recommended that protective gloves are wore when handing these parts.

Fuel

This stove is designed to burn either well-seasoned wood or manufactured smokeless fuels. For optimal performance, all fuel must be dry. Timber should be thoroughly seasoned to ensure its moisture content is below 20%.

Using damp wood is highly inefficient, as the stove's energy is wasted boiling off moisture instead of generating heat. It will also cause significantly more soot and tar to build up in the stove, flue, and chimney.

WARNING: Prohibited Fuels

To protect your stove and ensure your safety, **DO NOT BURN** any of the following:

Wet or unseasoned wood
Construction timber (off-cuts, pallets, etc.)
Painted, treated, or varnished wood
Driftwood
Manufactured board products (e.g., MDF, plywood, particleboard)

Burning these materials will cause the fuel to burn inefficiently and produce excessive smoke, soot, and tar. This will coat and damage the internal components of the stove and flue and significantly increases the risk of a chimney fire.

Before Lighting the Stove

Before lighting the fire, perform the following checks:

1. Check the Flue: Ensure the chimney and flue are clear and free of any obstructions. This is especially important if you are using the stove for the first time or after a long period of it not being used.
2. Check the Ash Pan: Make sure the ash pan is empty and correctly positioned inside the stove.

This stove will function with wood or manufactured smokeless fuel, but in general all fuel should be dry, and timber should be well seasoned so as to have a moisture content below 20%. The use of damp wood will result in more soot and tar deposits being left in the chimney, flue and stove, and will not release heat if thermal energy is being used to drive out moisture from the fuel.

DO NOT BURN wet or unseasoned wood, construction timber, painted or treated wood, driftwood or manufactured board products. Doing so will result in the wood burning inefficiently and excess smoke, soot and tar will be produced. This will coat

and damage the internal components of the stove and flue and could result in a chimney fire.

Before lighting

If using for the first time, or following a long period out of use check that the flue is clear and unobstructed.

Check that the ash pan is empty and in position.

This stove will function with wood or manufactured smokeless fuel, but in general all fuel should be dry, and timber should be well seasoned so as to have a moisture content below 20%. The use of damp wood will result in more soot and tar deposits being left in the chimney, flue and stove, and will not release heat if thermal energy is being used to drive out moisture from the fuel.

DO NOT BURN wet or unseasoned wood, construction timber, painted or treated wood, driftwood or manufactured board products. Doing so will result in the wood burning inefficiently and excess smoke, soot and tar will be produced. This will coat and damage the internal components of the stove and flue and could result in a chimney fire.

Before lighting

If using for the first time or following a long period out of use check that the flue is clear and unobstructed.

Check that the ash pan is empty and in position.

WARNING:

During the first few times the stove is used, the heat-resistant paint will be curing and may give off small amounts of smoke and odours. This is completely normal for this type of appliance, and the room should be well ventilated.

To aid this process and not damage the stove finish, the first few times a new stove is used the fire should be kept to a moderate size and not fired vigorously.

Lighting a wood fire

1. Prepare the Base: Place two or three firelighters onto the fire grate. On top of this, arrange about 1kg of dry kindling. Light the base of the fire with a taper or long match.

2. Warm the Chimney: Once the fire is lit, leave the stone door slightly ajar (open by 1-2cm). This allows the burning kindling to properly warm the chimney, which helps establish a strong draw and prevents condensation from forming on the glass.
3. Establish the Fire: After 2 to 5 minutes, the chimney should be warm enough to create a good draw. You can now close the door completely. At this stage, leave the air control fully open to supply the fire with plenty of oxygen.
4. Refuel with Logs: Once the kindling has burned down to form a solid bed of glowing embers, it is time to refuel. Add four or five pieces of seasoned wood, approximately 200mm by 100mm in size.

Caution: Do not be tempted to overfill the firebox. Overloading the stove creates a risk of fuel falling against the glass or spilling out when the door is opened.

Place 2 or 3 firelighters or screwed up newspaper onto the fire grate with about 1 kg of kindling and light the fire with a taper.

When the firelighters or newspaper are burning, leave the door ajar about 1 to 2 cm to achieve a good draw and avoid condensation. Allow the burning kindling to warm up the chimney.

After 2 to 5 minutes the chimney should be warm enough create a good draw and the door can be closed but leave air control open (the control wheel on the door).

Once the kindling has formed a good bed of glowing embers the stove can be refueled with 4 or 5 pieces of wood with an approximate size of 200mm by 100mm (*do not be tempted to overfill the firebox and risk fuel falling onto the glass or out the fire as the door is opened*)

WARNING:

When opening the door always open gently for the first 2 to 3 cm to allow the pressure to equalise and stop smoke from escaping.
The stove should not be operated with either door left open for long periods.
The stove door should never be left open when the stove is in use.

Under normal chimney draft conditions expect to refuel the stove every 45 to 60 minutes.

Refuelling Procedure

For clean and efficient burning, always refuel the stove by placing new logs onto a hot

bed of glowing embers.

If there is not enough burning material in the firebox to properly ignite a new load of fuel, it will smoulder and create excessive smoke. To prevent this, you must refuel only when there is a sufficient quantity of embers to ensure the new fuel will catch fire within a reasonable period.

If the ember bed is too low or has cooled down, do not add large logs directly. Instead, add a small amount of dry kindling to rebuild the fire first. Once the kindling is burning brightly, you can then add your logs. This will prevent excessive smoke emissions.

Always refuel onto hot embers. if there is insufficient burning material in the firebed to light a new fuel charge, excessive smoke emission can occur. Refuelling must be carried out onto a sufficient quantity of glowing embers and ash that the new fuel charge will ignite in a reasonable period. If there are too few embers in the fire bed, add suitable kindling to prevent excessive smoke

---

WARNING:

⚠ Directly after re-fuelling, It was necessary to operate with the door ajar for a period of 3 minutes in order to maintain flames on the new re-fuel charge.

After adding new fuel, leave the door slightly ajar for approximately 3 minutes. This will help the new logs ignite quickly and ensure they burn with a flame rather than smoldering.

After adding new logs, do not leave the stove unattended until the flames are well-established on the new fuel.

It is crucial to follow these instructions to ensure the stove burns cleanly and operates at maximum efficiency.

Warning: Do Not Overload the Stove

You must not overload the firebox with fuel, as this can cause the fire to smoulder and produce excess smoke. Following the correct refuelling procedure will maximise the stove's performance.

Typically, a load of four logs will burn for about one hour with an attractive flame pattern. However, this duration can vary depending on external factors like windy weather conditions and the specific dimensions of your chimney installation.

Do not leave the fire unattended until the flames are well established on the newly

charged logs

It is important to follow these instructions in order to achieve clean burning and to maximise the efficiency of the stove.

The stove must not be overloaded with fuel. Overloading can cause excess smoke, Following the above procedure will maximise the performance of the stove. Typically, the four logs will burn with an attractive flame pattern and will last for about an hour (although this will depend on weather conditions, e.g. whether it is windy, and specific installations, e.g. chimney dimensions)

WARNING:

If there is insufficient burning material in the fire bed to light a new fuel charge, excessive smoke emission can occur. Refuelling must be carried out onto a sufficient quantity of glowing embers and ash, that the new fuel charge will ignite in a reasonable period. If there are too few embers in the fire bed, add suitable kindling to prevent excessive smoke

The maximum amount of fuel specified in this manual should not be exceeded, overloading can cause excess smoke.

Operation with the door open can cause excess smoke. The appliance must not be operated with the appliance door left open except as directed in the instructions.

Operation with the air controls or dampers open can cause excess smoke. The appliance must not be operated with air controls or dampers door left open except as directed in the instructions

De-ashing the stove

Before attempting to remove ash, you must ensure the fire has burned out completely and the ashes are fully cooled down.

Important: Ash can retain heat for a surprisingly long time and may take up to two or thee days to cool down completely. Always place cooled ash into a metal or other non-combustible container.

WARNING: DO NOT ATTEMPT TO REMOVE ASH WHILE THE STOVE IS HOT OR STILL IN USE.

Before removing the ash, make sure the fire has burned out completely and the ashes are cool (please note the ash can take 2-3 days to cool completely)always place ash in a non-combustible container.

DO NOT ATTEMPT TO REMOVE ANY ASH WHILST THE STOVE IS HOT

WARNING

Take great care when removing and emptying the ash pan. It may be very hot and still contain burning or smouldering embers and is a fire risk.

7. Guidance on safe operation

Fire can be very dangerous

During operation, the entire stove, including its fittings, door handles, and controls, will become very hot. Always exercise caution and use protective gloves when handling the appliance.

Do not over-fire the stove

It is possible to fire the stove beyond its design capacity, which can cause permanent damage. Watch for signs of over-firing, such as any part of the stove or flue pipe beginning to glow red. If this happens, immediately reduce the air supply by adjusting the controls to lower the burning rate.

Emergency Procedures

In the event of a chimney fire:

If you suspect a chimney fire is occurring, follow these steps immediately:

1. **Shut all air controls** on the stove to cut off the oxygen supply.
2. **Raise the alarm** to alert everyone in the building.
3. **Evacuate the building.**
4. **Call the fire brigade.**
5. **Do not re-enter the building** until it has been declared safe by the fire service.

If You Detect Fumes:

If installed, operated, and maintained correctly, this stove will not emit fumes into the room, except for occasional small amounts during refuelling or de-ashing.

If you notice persistent fumes during normal operation, take the following actions:

1. **Ventilate the room** immediately by opening all doors and windows.
2. **Let the fire burn out** on its own. Do not add more fuel.
3. **Leave the room.**
4. Once the stove is completely cold, **check the stove, flue, and chimney like blockages.**
5. **Do not use the stove again** until the cause of the problem has been identified

and corrected. Seek professional help if necessary.

Adverse Weather Conditions

In some installations, specific weather conditions (particularly strong winds from certain directions) can affect the chimney's draw, causing a 'downdraught'. This can push fumes back into the room. If you notice this happening, do not use the stove. Seek advice from a professional flue installer, who may recommend a solution such as fitting an anti-downdraught cowl.

Fire can be very dangerous

During operation, the stove and all the fittings (door handles and controls) get very hot.

Do not over fire the stove.

It is possible to fire the stove to such an extent that damage may occur. Look out for parts of the stove or flue glowing red hot. If such a situation occurs adjust the air supply accordingly to reduce the burning rate.

Chimney fire

In the event of a chimney fire:

Shut all air controls immediately
Raise the alarm and evacuate the building
Call the fire brigade
Do not re-enter the building

Fumes

If installed, operated and maintained correctly the stove will not emit fumes into the room other than occasionally very small amounts when re-fuelling or de-ashing.

If fumes are being emitted during normal operation, ventilate the room by opening all doors and windows.

Let the fire burn out

Leave the room

Check the stove, flue and chimney for blockages

Do not re-use the stove until the cause of the problem has been identified and rectified.

If required seek expert help.

Adverse weather conditions

In a small number of installations, very occasionally in specific weather conditions (direction of wind) the draw of the chimney may be affected causing a downdraught and fumes to be emitted into the room.

If this is the case the stove should not be used and advice sought from a professional flue installer who would be able to advise on possible solutions such as an anti-downdraught cowl.

8. Maintenance

To ensure your stove operates safely and efficiently, regular cleaning and maintenance are essential. All maintenance should be performed when the stove is completely cold.

Routine Cleaning

The inside of the stove will require regular cleaning, especially during periods of heavy use. Experience will show you how often this is needed.

Safety First: It is strongly recommended to wear a dust mask, protective gloves, and safety glasses when cleaning the stove's interior.

Cleaning Process

1. Start at the top of the stove and work your way down.
2. Use a stiff brush and an industrial-type vacuum cleaner to dislodge and remove soot, ash, and other deposits.
3. Pay particular attention to the air inlet controls, as these can become obstructed and affect the stove's performance.

General Maintenance

Annual Service: This stove requires regular maintenance and an annual service by a competent engineer. The stove and flue should only be inspected and maintained when cold. Do not carry out any unauthorised modifications to this appliance.

Inspecting for Damage

- When cleaning, take the opportunity to check for any damaged or broken internal parts.
- **Wear Parts:** All components in direct contact with the fire (such as the grate, baffle plate, and internal air boxes) are considered consumable 'wear parts. Their lifespan depends on how vigorously the stove is used.
- These parts must be inspected regularly. If they become worn, damaged, or are not positioned correctly, other components like the stove top and sides will be exposed to excessive heat, which can cause permanent damage.

Replacement Parts

- In the event of damage, replacement components can be obtained from your local distributor.
- **Warning:** On no account should unauthorised spare parts be used. Only use replacement parts recommended by the manufacturer.

Component-Specific Maintenance

Stove Body

The stove is finished with a heat-resistant paint. To clean it, wait until the stove is completely cool and then use a soft brush. The finish can be renovated with specialised stove paint. If rust appears, clean the area thoroughly with a wire brush and apply a suitable anti-rust treatment before repainting.

Prolonged Disuse: During long periods when the stove is not in use (e.g., over the summer), leave the air controls open and the door slightly ajar. This allows air to circulate, discouraging condensation and preventing corrosion.

Fire Rope Seals

Regularly inspect the fire rope seals around the door and glass.

- An effective seal is crucial for efficient operation.
- If a rope is loose or becoming detached, re-secure it using a high-temperature stove rope adhesive.
- If the top is in poor condition, it must be replaced with a new, approved rope.

Stove Glass

- Cleaning: Clean the glass only when it is cool. Avoid abrasive cleaners, which can scratch the surface and make future cleaning more difficult. The glass will normally stay clean during use, but it can blacken if you burn damp fuel or operate the stove at a very slow rate. This blackening can often be burned off by running the stove at a higher temperature, or it can be removed with a specialist stove glass cleaner.
- Breakage: The glass will not fracture from heat alone, but it can be broken by an impact (e.g., logs falling against it, a misplaced poker, or slamming the door).
- Replacement: If the glass breaks, it can be removed by unscrewing its retaining clips. Carefully remove any broken pieces and the old fireproof seal. Place the new, approved replacement glass against a new seal and carefully re-tension the retaining clips evenly to avoid breaking the new pane. **Never use any glass that is not specifically approved for use with this stove.**

Chimney

- It is essential to have your chimney swept at least **once a year.**
- Regularly inspecting the inside of your stove can help you determine if the chimney needs more frequent cleaning.
- If the stove has been out of use for an extended period (e.g., over the summer), the chimney must be inspected by a competent person before you use it again.
- **Access:** If required, the flue can be accessed for cleaning from inside the stove.

Cleaning

The inside of the stove may require regular cleaning, especially during periods of peak use, the frequency of this being indicated by experience. it is advisable to wear a dust mask, protective gloves and safety glasses when cleaning.

Use a stiff brush and industrial type vacuum cleaner to dislodge and remove as much material as possible, starting at the top of the stove and working down to the bottom. Particular attention should be given to the air inlet controls which can become obstructed.

General Maintenance

Take this opportunity to check for any damaged parts inside the stove. In the event of damage or broken components, replacements can be obtained from your local distributor. On no account should unauthorised spare parts be used.

The stove and flue should be inspected and maintained when in a cold condition. No unauthorised modification of this product should be carried out. This stove requires regular maintenance by a competent engineer.

Stove body

The stove is finished with a heat-resistant paint which can be cleaned with a soft brush. Wait until the stove has cooled down before doing this. This finish can be renovated with stove paint from authorised supplier, although the paint may not be an exact match and it may be necessary to repaint the complete stove/

If the stove is purely ornamental, painting will provide a durable, attractive finish. If the stove is used for heating, a high temperature heat resistant paint must be used, in either aerosol or brush applied form. Should rust become apparent, clean thoroughly with a wire brush and apply a suitable anti-rust treatment.

During prolonged periods out of use, the air inlets should be left open, and the door left slightly ajar in order to circulate fresh air and discourage condensation from forming which could encourage corrosion.

Fire Rope

Check the rope around the door and glass, if rope is becoming detached, replace with rope approved for this purpose.

Inspect the fireproof door seals where fitted, to ensure there is an effective seal around the door and re-fix it if loose using stove rope adhesive. If in poor condition, it should be replaced.

Cleaning the stove

Clean the outside of the stove with a soft brush.
Note that if required the flue can be accessed for cleaning from inside the stove.

Stove glass

Clean any glass panels when cool, avoiding abrasive substances which could scratch the glass and make subsequent cleaning more difficult. Wet logs against a heated glass, a badly aimed poker or heavy slamming of the doors could crack the glass panels. The glass will not fracture with heat. Never replace any broken glass with glass not approved for use with cast iron stoves.

The window glass should remain clean during normal use, but it can become blackened if the stove is being operated with either damp fuels or at a slow burn rate. The blackening may be dispersed by burning firefly at a much higher temperature, or it may be cleaned off using specialist glass cleaner.

In the event of the glass being broken, it can be removed by unscrewing the retaining clips, taking care not to damage the fireproof seal. The replacement glass should be carefully placed against the seal and the retaining clips re-tensioned. Take care to tension these evenly or there is a risk of breaking the new glass pane.

Chimney

It is important to have the chimney cleaned at least once a year.
Regular inspection and cleaning of the internal components of the stove can indicate if the chimney requires more frequent cleaning.

If the stove has been unused for an extended period (during the summer) the chimney should be checked by a competent person before use.

Note

All parts that are in direct contact with the fire (grate, Baffle, back or side air boxes) are considered as normal wear parts. Their life will be dependent on how vigorously the stove is operated and they must be inspected and maintained on a regular basis. If they become worn, damaged or not positioned correctly, non-wear parts such as the stove top and sides will be exposed to excessive heat and may be damaged. Only use replacement parts recommended by the manufacturer.

9.Fault Finding

Fire will not burn

The fuel is too wet and not suitable
Air inlets to the stove are blocked
The flue is blocked or restricted
Inadequate air supply into the room

Soot build up on glass

Fuel is too wet
Fuel pieces are too large and “smouldering” rather than burning.
The stove operating temperature is too low
The stove is being run too “slow” with not enough air
Poor chimney draft

Excessive wear on internal parts

Stove fired too vigorously
Too little air passing through the bottom grate
Use of wood that is too dry (e.g. wood from old furniture)

10.UKCA Data Plate

UK CA

EN13240:2001/A2:2004
Roomheater fired by solid fuel

Roomheater type	Bolesworth
Defra Approved Wood Burning Stove	
Fuel types	Wood, Manufactuered Smokeless Fuel
Nominal heat output	
Wood	5KW
Manufactuered Smokeless Fuel	5KW
Total net energy efficiency	
Wood	81.3%
Manufactuered Smokeless Fuel	77.0%
Distance to adjacent combustable materials	
Side	500mm
Rear	400mm
Emission of CO in combustion products (13% O_2)	
Wood	0.11%
Manufactuered Smokeless Fuel	0.11%
Flue gas temperature	
Wood	274 °C
Manufactuered Smokeless Fuel	280 °C

The appliance is capable of intermittent operation
The appliance cannot be used in a shared flue
Follow the users manual and only use recommended fuel

Fireplace Warehouse Ltd 2020
Unit A1,Yew st,Stockport Trading Estate,Stockport,
SK4 2JZ